ELECTRI-SPREAD PICK-UP SANDERS
SERIES IV

2013

Parts List
&
Service Manual

MFR BY:
SMITH METAL WORKS OF NEWARK INC.
RT 31 EAST
NEWARK, NEW YORK 14513
PHONE: 315-331-1651
FAX: 315-331-0373

All "Electri-Spread Pick-up Sanders come equipped with a name tag attached to the rear left portion of the sander. The model and serial # are stamped into the name plate.
Always use the model and serial numbers in all correspondence regarding parts and or operation.

SAFETY

1. Insure that all personnel involved with operation and maintenance of this equipment are properly instructed.

2. Always disconnect all power sources when service is required.

3. Avoid bodily contact and keep all loose clothing clear of moving parts when observing unit in operation.

When loading, and unloading unit, use either single point lift point or the 4 hook points at each corner. NEVER attempt to lift the unit with any material in it. As always, NEVER STAND BENEATH a machine being lifted.

POWER REQUIREMENTS

Electric models

A fully loaded series IV pickup spreader will draw approximately 30 to 35 amperes. A 100 amp, dual battery system is recommended.

Hydraulic model –

Minimum hydraulic source – 10 GPM at 1500 PSI Line size – ½" pressure, 3/4 "return line.

INSTALLATION

PLACEMENT OF SPREADER IN VEHICLE

All series IV spreaders are shipped with two hardwood planks bolted to the bottom of the chassis. They provide a surface to block against and help the conveyor return chain remain clear of spillage.

Use the single lift point or the lift points at each corner to raise the spreader above the surface to be loaded. Keep the spreader as far forward as possible and center it up side to side. Wood blocking is recommended at the front to prevent the spreader from walking forward. Use the ratchet straps provided or another method you feel comfortable with to tie it down. Do not over tighten the tie downs as this may distort the hopper. DO NOT LIFT THE SPREADER UP WITH ANY MATERIAL STILL IN IT.

"HOOKING UP" THE POWER

ELECTRIC POWERED SPREADER –
Every electric spreader is sold with an ON /OFF installation kit, complete with all the electrical components required to make the unit operate. Follow the wiring diagram included in this service manual.

ELECTRIC POWERED SPREADER WITH OPTIONAL SPINNER SPEED CONTROLLER Use the wiring diagram from the manufacturer of the speed controller to wire up the spreader if it was purchased with or separate from the spreader.

ELECTRIC POWERED SPREADER WITH OPTIONAL DUAL MOTR CONTROLLER
Use the wiring diagram from the manufacturer of the speed controller to wire up the spreader if it was purchased with or separate from the spreader.

HYDRAULIC POWERED SPREADER –
Attach a ½" hydraulic line to one port on the hydraulic motor. Attach a ¾" hydraulic line to the other port. Check direction, if the conveyor runs in reverse, IMMEDIATELY SHUT OFF FLOW and reverse the lines on the motor. Same applies to the spinner motor.

OPERATION

After you have the spreader properly installed, we recommend a “dry” run with the hopper empty. Check for any poor or faulty operation.

Load the hopper with your desired material and adjust the unit for desired volume and range. Volume is controlled with the sluice gate, moving the handle up or down to open/close the door over the conveyor. The spreader will convey considerably more than 1 cubic foot every minute with the door full open. With the door closed down, it will convey approx. 1 cubic foot every 45 seconds. The range is adjusted using the 3 “flappers” on the bottom the discharge chute. The spreader will “throw” material approximately in a 15foot radius when the flaps are in a horizontal position.

An inverted “V” is included as standard equipment. The purpose of this V is to lessen the downward pressure on the conveyor thereby making the conveyor start easier when loaded. If the material you use tends to “bridge”, you may elect to remove the V which may sacrifice power consumption to gain consistent material flow.

We recommend that material not be left in the hopper if it is to be left below freezing. Possible electrical problems may result in trying to start a frozen load in addition to stretching and possibly snapping the conveyor chain.

MAINTENANCE

Proper scheduled and operator maintenance is the key to long life of the components.

Proper lubrication consists of keeping bearings greased. Use a high-quality grease as some grease will actually freeze and bind up the bearings. The gearbox should not have to be checked unless a seal or gasket is leaking. We suggest removing P/N 160-3-3N, use a flashlight and look for any signs of oil inside the enclosure.
If you ever need to put oil in the gearbox, USE NON-DETERGENT 10 WT. MOTOR OIL. We suggest keeping a quart on hand as it is not readily available.

Cleanliness of the unit will minimize friction. Keep the unit washed off especially the roller chains and the conveyor chain, this will prolong the life of the plastic slider bed.

Proper tension of the chains, do not over tighten the conveyor chain, a gap of ½” is acceptable between the return side of the chain at the lowest point and the chassis. Excessive tensions will result in overloading the motor.

Under P/N 160-34 (chain guard) is a #50 roller chain P/N 160-33A that drives the conveyor. This should be checked periodically for looseness. **DISCONNECT POWER** before you attempt to feel behind the guard to check tension. This chain should move no more than ½ inch on the return side (rear). If adjustment is needed, remove guard, loosen the 4 nuts that attach the gearbox to P/N 160-3N. Loosen the jam nut at the bottom of P/N 160-3N and tighten bolt until it has a “little” play. DO NOT MAKE IT “BANJO” TIGHT. Retighten the jam nut and install guard.

OFF SEASON MAINTENANCE (summer storage)

Thoroughly flush the entire unit clean of salt and sand. Lube all bearings and check gearbox oil level. We strongly recommend the removal of P/N 160-33A roller chain and the conveyor chain. Immerse both chains in oil. Doing this will extend the life of these chains dramatically.
The small chains have a master link that will need to be removed. The conveyor chain will have to be run until the master link is at the idler end. You may have to remove the rear cover to gain easy access to the master links. Remove the cotter pins and tap out the pins using a drift smaller than the pin diameter.

WARRANTY

SMITH METAL WORKS warrants our products to be free from defects in materials and workmanship for a period of ONE year from date of purchase. This warranty is limited to the repair or replacement of products failing under normal use and operation of the equipment. The defective part(s) and a copy of the original paid invoice or bill of sale must be returned to the factory to be considered for repair or replacement.

TECHNICAL QUESTIONS

Should you have any problems or concerns with your new unit, you may contact the factory at 315-331-1651.

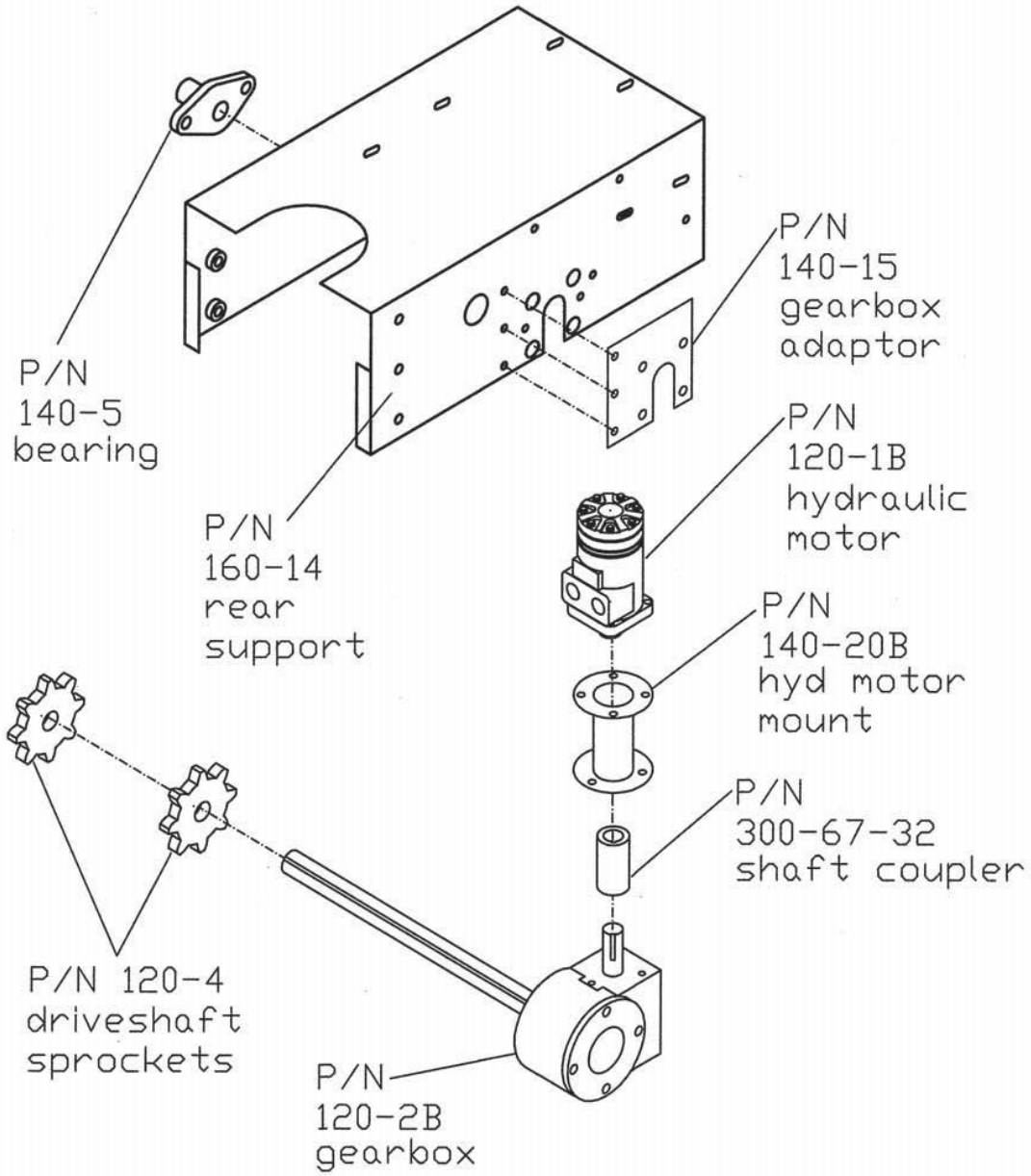

SMITH METAL WORKS Series IV	Dwg. SM 2013 HYD. DRIVE ASSEMBLY
START serial # 10145	8/2013

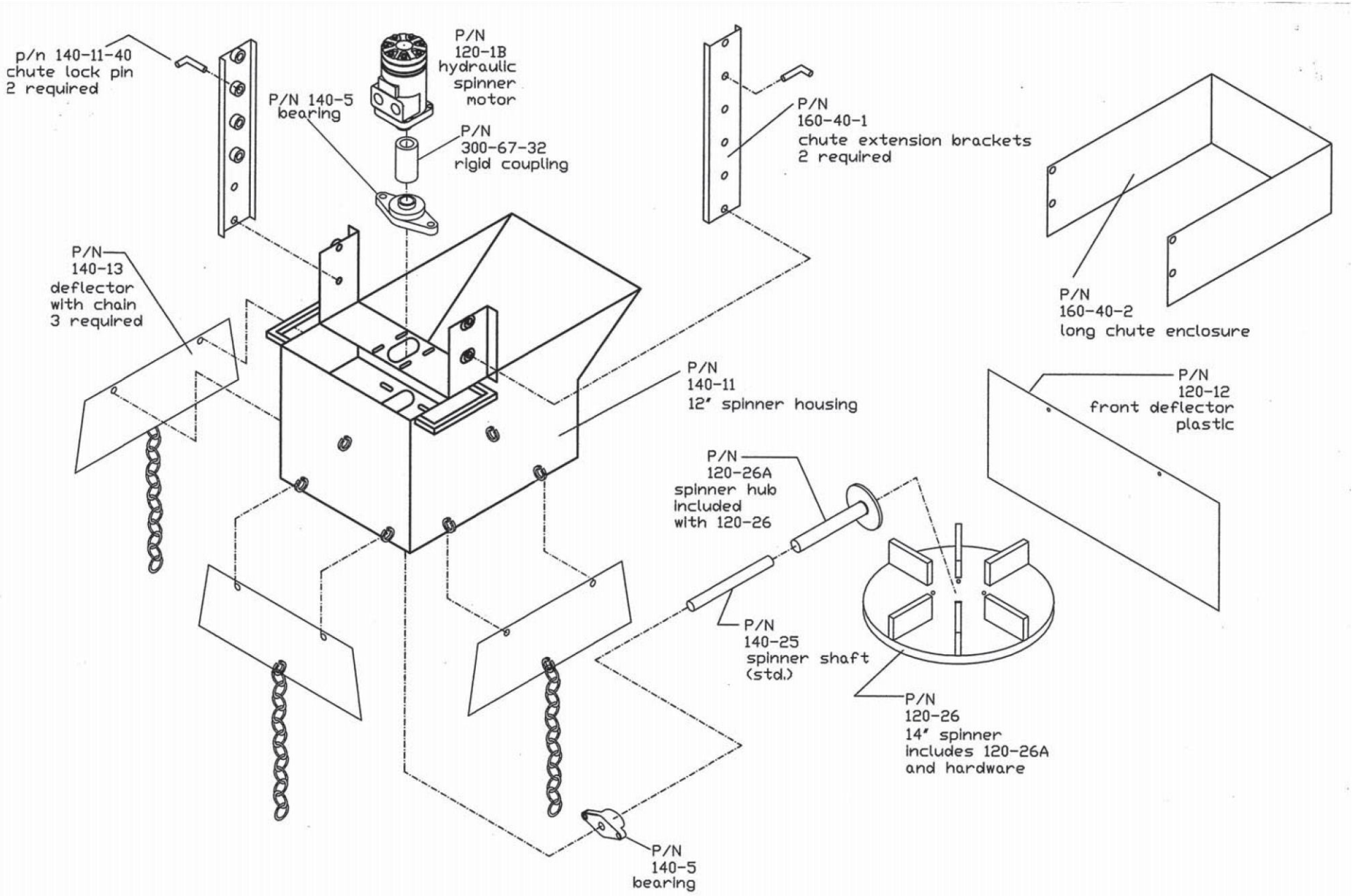

SMITH METAL WORKS Series IV Dwg. SM 2013 HYDRAULIC ADJUSTABLE CHUTE

8/2013

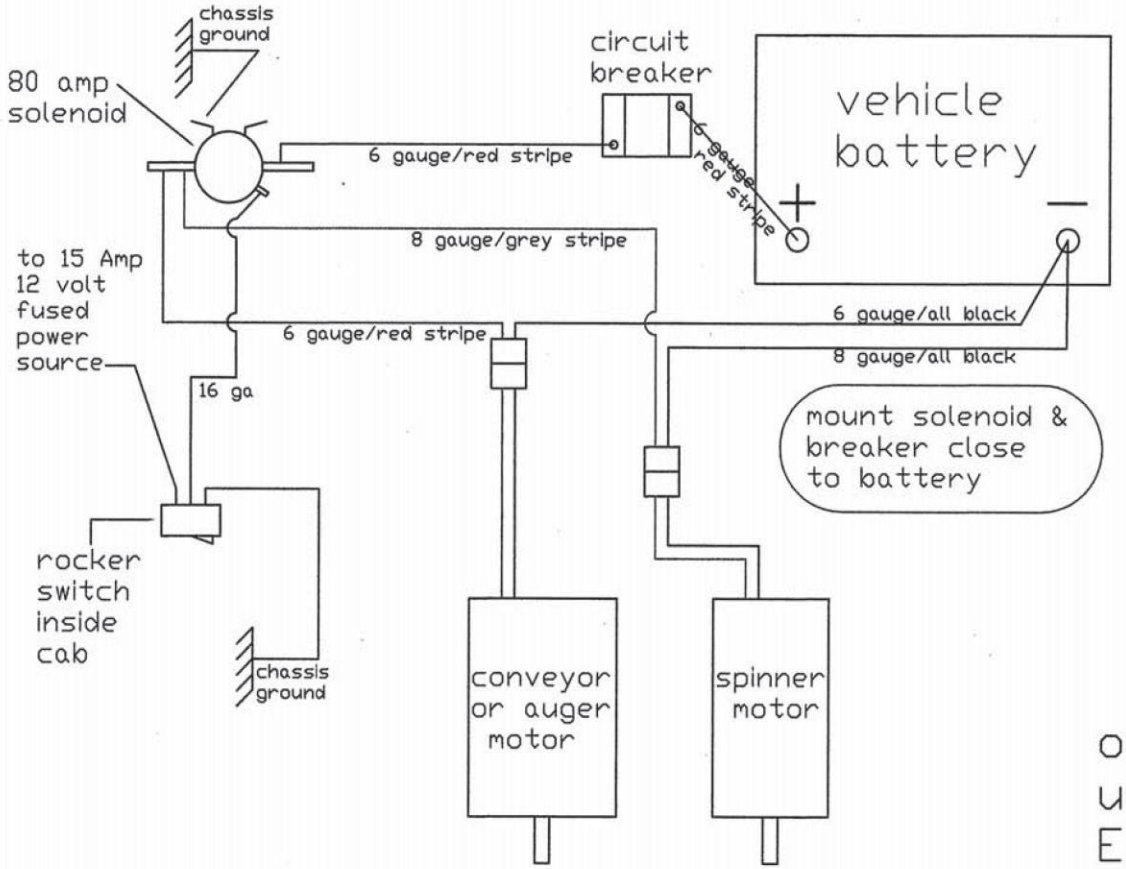

the following parts are included
for wiring ON/OFF
one solenoid - P/N 99-B98596
one circuit breaker
one rocker switch and mtg. bracket
three 16 g. female spade connectors
minimum 60" - 16 gauge wire
one - 16 g. 3/16" ring terminal for solenoid
two - 6 g. 1/4" ring terminals for breaker
six - 6 g. 5/16" ring terminals
one - 6 g. x 25 foot power cable for conveyor
one - 8 g. x 25 foot power cable for spinner

on / off wiring used on DUAL ELECTRIC SPREADERS

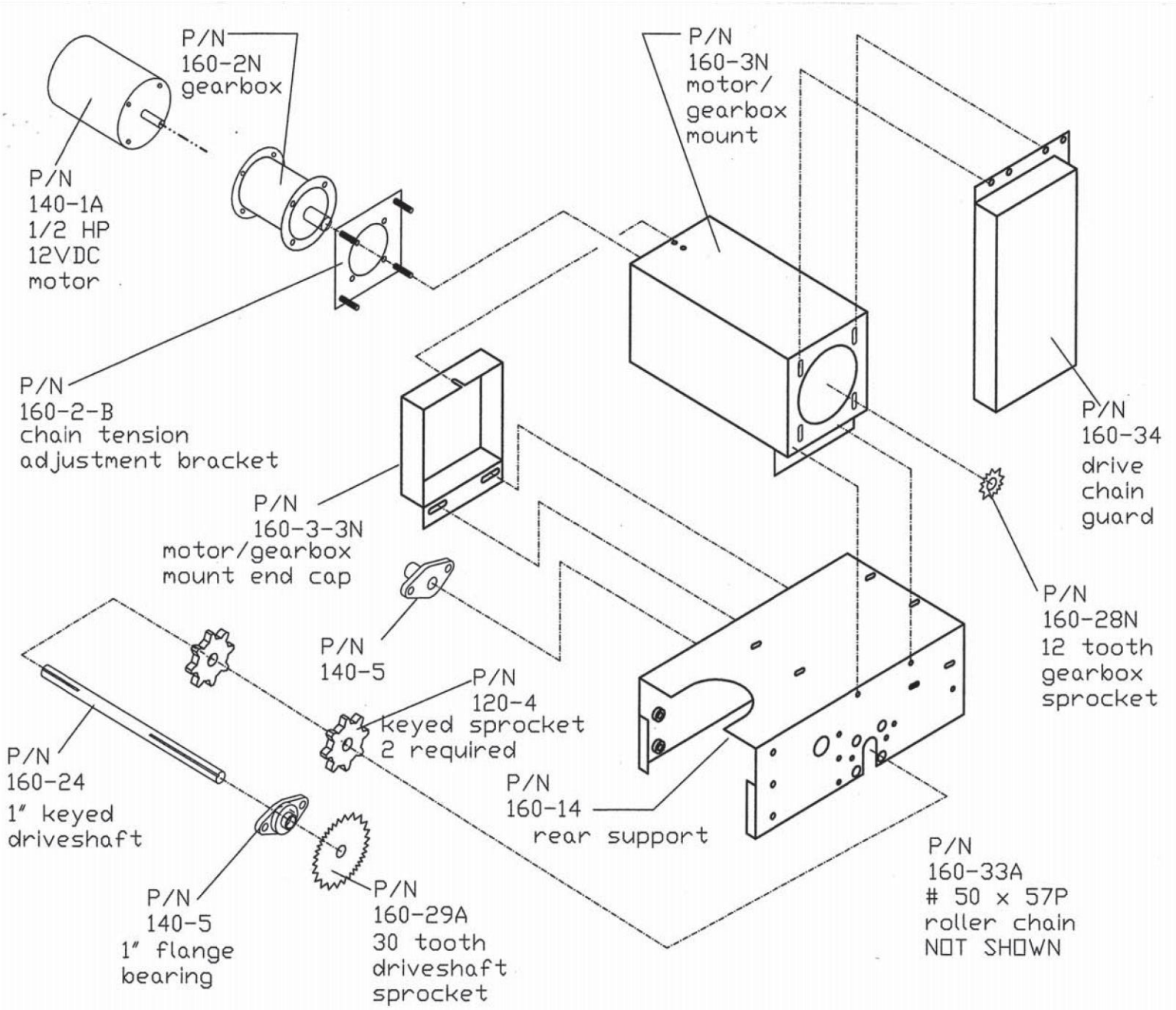

SMITH METAL WORKS	Series IV	Dwg. SM 2013 ELEC. DRIVE ASSEMBLY
	START serial # 11900	8/2013

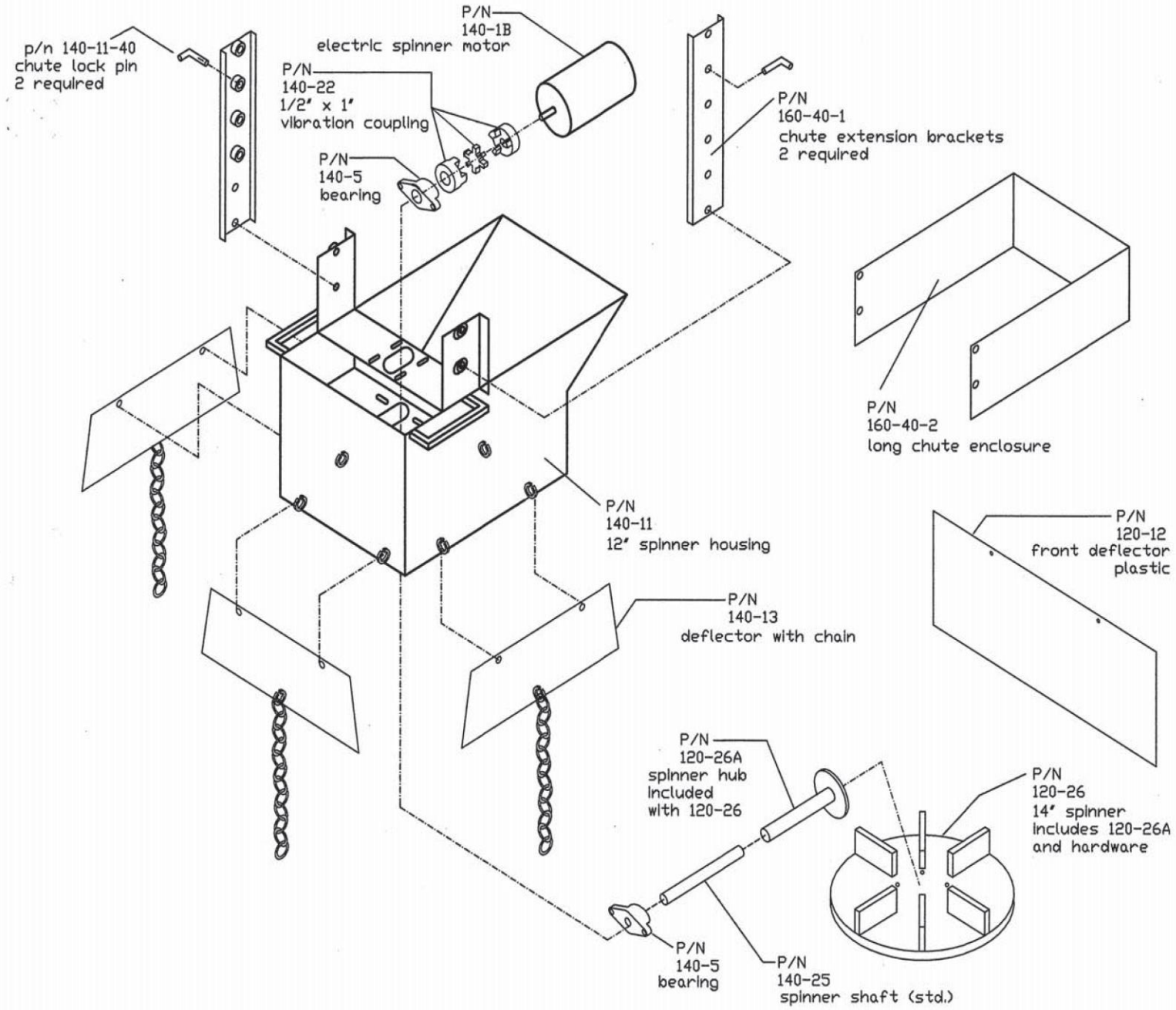

SMITH METAL WORKS Series IV Dwg. SM 2013 ELECTRIC ADJUSTABLE CHUTE

8/2013

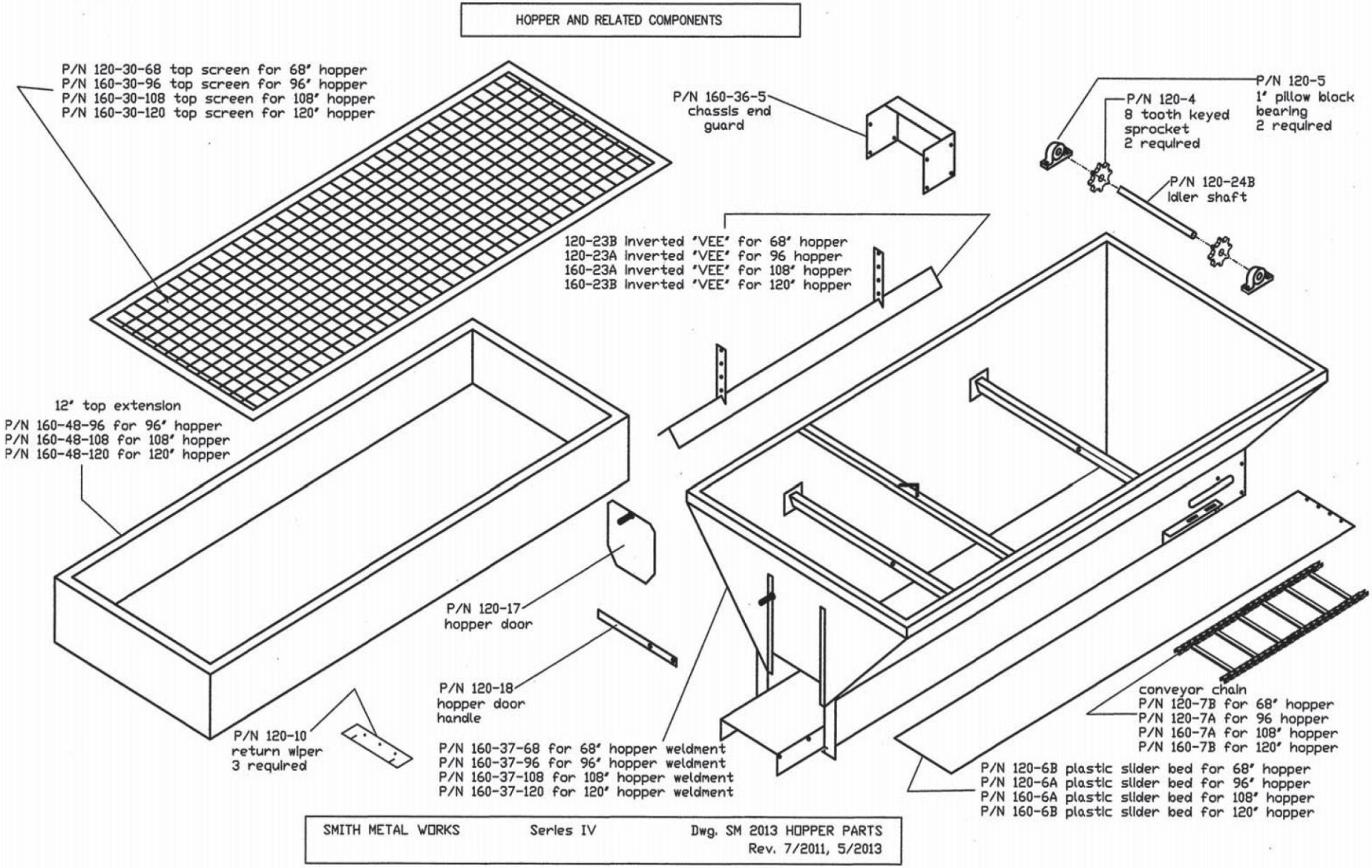
HOPPER AND RELATED COMPONENTS
P/N 120-30-68 top screen for 68' hopper
P/N 160-30-96 top screen for 96' hopper
P/N 160-30-108 top screen for 108' hopper
P/N 160-30-120 top screen for 120' hopper
P/N 160-36-5
chassis end
guard
P/N 120-5
1' pillow block
bearing
2 required
P/N 120-4
8 tooth keyed
sprocket
2 required
P/N 120-24B
idler shaft
120-23B Inverted 'VEE' for 68' hopper
120-23A Inverted 'VEE' for 96 hopper
160-23A Inverted 'VEE' for 108' hopper
160-23B Inverted 'VEE' for 120' hopper
12' top extension
P/N 160-48-96 for 96' hopper
P/N 160-48-108 for 108' hopper
P/N 160-48-120 for 120' hopper
P/N 120-17
hopper door
P/N 120-18
hopper door
handle
P/N 120-10
return wiper
3 required
P/N 160-37-68 for 68' hopper weldment
P/N 160-37-96 for 96' hopper weldment
P/N 160-37-108 for 108' hopper weldment
P/N 160-37-120 for 120' hopper weldment
conveyor chain
P/N 120-7B for 68' hopper
P/N 120-7A for 96 hopper
P/N 160-7A for 108' hopper
P/N 160-7B for 120' hopper
P/N 120-6B plastic slider bed for 68' hopper
P/N 120-6A plastic slider bed for 96' hopper
P/N 160-6A plastic slider bed for 108' hopper
P/N 160-6B plastic slider bed for 120' hopper
SMITH METAL WORKS
Series IV
Dwg. SM 2013 HOPPER PARTS
Rev. 7/2011, 5/2013

120 - 1B	Hydraulic motor	1
120 - 2B	Gearbox for hydraulic spreader	1
120 - 4	8 tooth keyed Drive/Idler Sprocket	4
120 - 5	1" Pillow block bearing	2
120 - 6B	Plastic slider bed (68" hopper)	1
120 - 6A	Plastic slider bed (96" hopper)	1
120 - 7B	Conveyor drag chain (68" hopper)	1
120 - 7A	Conveyor drag chain (96" hopper)	1
120 - 10	Conveyor chain wiper	2
120 - 12	Plastic chute deflector (front)	1
120 - 17	Hopper door	1
120 - 18	Door handle	1
120 - 23B	Inverted VEE (68" hopper)	1
120 - 23A	Inverted VEE (96" hopper)	1
120 - 24B	Idler shaft (keyed)	1
120 - 30 - 68	50" X 68" top screen	1
120 - 26A	Spinner hub only	1
120 - 26	14" Poly Spinner & hub	1
140 - 1A	12VDC Electric motor	1
140 - 1B	12 VDC Spinner motor	1
140 - 5	1" 2 Bolt flange bearing	4
140 - 11	12" Spinner housing	1
140 - 11 - 40	Discharge chute removable pin	2
140 - 15	Gearbox adaptor (hydraulic only)	1
140 - 13	SS Hinged deflector with chain	3
140 - 20B	Hydraulic motor mount	1
140 - 22	Anti - vibration coupling	1
140 - 25	Spinner shaft (12")	1
140 - 39A	Install kit (electric)	1

160 - 2 - B	Chain tension adjustment bracket	1
160 - 2N	Gearbox (start S/N 10214)	1
160 - 3N	Motor mount (electric motor)	1
160 - 3 - 3N	End cap for 160 - 3N	1
160 - 6A	Plastic slider bed (108" hopper)	1
160 - 6B	Plastic slider bed (120" hopper)	1
160 - 7A	Conveyor drag chain (108" hopper)	1
160 - 7B	Conveyor drag chain (120" hopper)	1
160 - 14	Rear support	1
160 - 23A	Inverted VEE (108" hopper)	1
160 - 23B	Inverted VEE (120" hopper)	1
160 - 24	Drive shaft (keyed)	1
160 - 28N	Gearbox sprocket (12 tooth)	1
160 - 29A	Drive shaft sprocket (30 tooth)	1
160 - 30 - 96	50" X 96" top screen	1
160 - 30 - 108	50" X 108" top screen	1
160 - 30 - 120	50" x 120" top screen	1
160 - 33A	Gearbox to drive shaft chain (57 P)	1
160 - 34	Chain guard	1
160 - 36 - 5	Chassis end guard	1
160 - 37 -68	Hopper weldment 68" long	1
160 - 37 - 96	Hopper weldment 96" long	1
160 - 37 - 108	Hopper weldment 108" long	1
160 - 37 - 120	Hopper weldment 120" long	1
160 - 40 - 1	Chute extension brackets	2
160 - 40 - 2	Long chute enclosure	1
160 - 48 - 96	12" top extension for 96" hopper	1
160 - 48 - 108	12" top extension for 108" hopper	1
160 - 48 - 120	12" top extension for 120" hopper	1
300 - 67 - 32	Shaft coupler	1